SIEMENS

7636

VGG...

VGF...

VGH...

Gas Valves

VGG...
VGF...
VGH...

- **Single valves of class A for installation in gas trains**
- **Safety shutoff valves conforming to EN 161 in connection with SKP... actuators**
- **Suitable for use with gases of gas families I...III**
- **Valves in connection with SKP... actuators open slowly and close rapidly**
- **2-port valves of the normally closed type**
- **½“... DN125**
- **The gas valves are used in connection with the SKP… / SKL… electrohydraulic actuators**
- **As a control valve in connection with SQX... actuators and AGA60 adapter (not as a safety shutoff valve)**
- **Supplementary Data Sheets on actuators (refer to «Mechanical design»)**

The VG... and this Data Sheet are intended for use by OEMs which integrate the gas valves in their products!

Use

The gas valves are designed for use:
- In gas-fired combustion plant
- In gas trains of combustion plant
- As shutoff or control valves in the supply air line of industrial combustion plant with or without heat recovery system

The gas valves provide the following functions:
- Shutoff valve (in connection with SKP1... actuators)
- Control valve with shutoff feature (in connection with SKP2..., SKL25…, SKP5... or SKP7... actuators)

All types of gas valves can be combined with any of these actuators.

Warning notes

To avoid inquiry to persons, damage to property or the environment, the following warning notes should be observed!

Do not open, interfere with or modify the valves!

Any opening of the valve, replacement of parts or modifications to the original product is the user's responsibility and carried out at his own risk!

- All activities (mounting, installation and service work, etc.) must be performed by qualified staff
- When used in connection with gas, the valves constitute part of the safety equipment
- Fall or shock can adversely affect the safety functions. Such valves must not be put into operation, even if they do not exhibit any damage

Mounting notes

- Ensure that the relevant national safety regulations are complied with
- When used in connection with actuators type SKP2..., SKL25…, SKP5..., or SKP7..., the pressure switch for lack of gas must always be fitted upstream of the gas valve
- No special tools are required to assemble valve and actuator
- The actuator can be mounted or replaced while the valve is under pressure
- To prevent cuttings from falling into the valve, first mount the flanges on the pipes and then clean the parts
- Refer to the following Mounting Instructions

- VGG… / VGF… / VGH…	M7636
- VGG½"…3", VGF DN40…80	M7636.1
- VGF10.655..., VGF10.805..., VGG10.805...	M7631.3

Sealings

- No sealing materials are required to assemble valve and actuator
- Check to ensure that the valve is tight when all components are connected

Only with VGF... / VGH...:

- Check to make certain that the bolts of the flanges are properly tightened
- Check to ensure that the gaskets between the flanges are fitted

Mounting position

The valve can be installed in the gas train in any position. The permissible mounting positions of the actuator must be observed, however (refer to the relevant Data Sheet).

Direction of flow

The direction of gas flow must be in accordance with the direction of the arrow on the valve body.

Function

Stem retracts → Valve opens
Stem extends → Valve closes

Installation notes

Gas pressure	If the available gas pressure exceeds the valve's maximum permissible operating pressure, it must be lowered by an upstream pressure controller.

Commissioning notes

- In case of corrosive ambient conditions (e.g. when used near the sea), the valve body should be coated with protective lacquer

Standards and certificates

Conformity to EEC directives

- Electromagnetic compatibility EMC (immunity)	89 / 336 / EEC
- Directive for gas appliances	90 / 396 / EEC
- Directive for pressure devices	97 / 23 / EC

ISO 9001: 2000
Cert. 00739

ISO 14001: 2004
Cert. 38233

For use in the U.S. / Canada, the valves carry type suffix «U» (see example) and , and listed (*example:* VGG10.204**U**).

In connection with SKP…:

Type reference		DVGW	
VGG10.154P	x	x	---
VGG10.204P	x	x	x
VGG10.254P	x	x	x
VGG10.404P	x	x	x
VGG10.504P	x	x	x
VGG10.804P	x	x	x
VGG10.1541P	x	x	---
VGG10.2041P	x	x	---
VGG10.2541P	x	x	---
VGG10.4041P	x	x	---
VGG10.5041P	x	x	---
VGG10.204	x	x	---
VGG10.254	x	x	---
VGG10.404	x	x	---
VGG10.504	x	x	---
VGF10.404P	x	x	---
VGF10.504P	x	x	---
VGF10.654P	x	x	x
VGF10.804P	x	x	x
VGF10.5041P	x	x	---
VGF10.6541P	x	x	---
VGF10.8041P	x	x	---
VGF10.404	x	x	---
VGF10.504	x	x	---
VGF10.654	x	x	---
VGF10.804	x	x	---
VGH10.18050	x	x	x
VGH10.19050	x	x	x
VGH10.19150	x	x	x

Service notes

- Each time a valve has been replaced, check to ensure that the valve operates correctly and that it is tight both internally and externally
- Siemens valves may **only** be overhauled by Siemens HVAC Repair Centers
- VGH... valves are supplied without strainer. Fit a gas filter upstream of the valve or an AGA... strainer (refer to «Accessories») by the gas inlet

Disposal notes

Local and currently valid legislation must be observed.

Mechanical design

Actuators

The gas valves can be combined with the following types of actuators:

Type reference	Data Sheet	Function
SKP10...	N7641	ON / OFF
SKP11...	N7641	ON / OFF
SKP15...	N7643	ON / OFF
SKP20...	N7644	ON / OFF with constant pressure control / zero pressure control
SKP25...	N7643	ON / OFF with constant pressure control
SKP25.7... with SQS37...	N7643	ON / OFF with constant pressure control and electric setpoint adjustment
SKP50...	N7648	ON / OFF with differential pressure control, signal input → differential pressure
SKP55...	N7643	ON / OFF with differential pressure control, signal input → differential pressure
SKP70...	N7651	ON / OFF with ratio control, signal input → static pressure
SKP75...	N7643	ON / OFF with ratio control, signal input → static pressure
SKL25... (only for air)	N7643	ON / OFF with constant pressure control, slow closing 4...6 s, no function of safety shutoff
SQX... with AGA60	N4554	Steady position control, no function of safety shutoff

Type summary (other types of valves on request)

Nominal size	Material	Perm. operating pressure in mbar		Air flow rate at Δp = 1 mbar / m³ / h	Number of connections		Type reference			
							With profile		Without profile	
		Europe (to EN)	Other countries		Test point RP ¼ 3)	Pilot gas G ¾ 4)	Without stroke limitation	With stroke limitation 1)	Without stroke limitation	With stroke limitation 1)
Internally threaded to ISO 7/1										
½“	Die-cast al.	1200	1200	4.8	4	---	VGG10.154P	VGG10.1541P	---	---
¾“	Die-cast al.	1200	1200 (1400)*	8.9	4	---	VGG10.204P	VGG10.2041P	VGG10.204	---
1“	Die-cast al.	1200	1200 (1400)*	13.3	4	---	VGG10.254P	VGG10.2541P	VGG10.254	---
1 ½“	Die-cast al.	600	600 (1400)*	32.3	4	---	VGG10.404P	VGG10.4041P	VGG10.404	---
2“	Die-cast al.	600	600 (1400)*	47.4	4	---	VGG10.504P	VGG10.5041P	VGG10.504	---
3“	Cast iron	600	600 (700)*	85.4	2	2	VGG10.804P	---	---	---
* Only for use in Australia										
Flanged, PN16, to ISO 7005										
DN40	Cast iron	600	600	32.3	4	---	VGF10.404P	---	VGF10.404	---
DN50	Cast iron	600	600	47.4	4	---	VGF10.504P	VGF10.5041P	VGF10.504	---
DN65	Cast iron	600	600 (700)*	74	2	2	VGF10.654P	VGF10.6541P	VGF10.654	---
DN80	Cast iron	600	600 (700)*	85.4	2	2	VGF10.804P	VGF10.8041P	VGF10.804	---
* Only for use in Australia										
Flap type valves: High-flow with swing type flap. Great closing force. Version without strainer, to DIN, only for use on plant with gas trainer. **We recommend to install a strainer (refer to «Accessories» AGA80, AGA90 or AGA91!** These valves may only be overhauled by Siemens Repair Centers										
DN80	Cast iron	300	600 (700)*	128.4	4	1	---	---	VGH10.18050	---
DN100	Cast iron	300	400 (700)*	199.5	4	1	---	---	VGH10.19050	---
DN125	Cast iron	300	300 (500)*	277.6	4	1	---	---	VGH10.19150	---
* Only for use in Australia										

Legend
(also refer to «Dimensions»)

1) Cannot be used with attached pressure governor
2) Flow rate reduced by 20 %
3) On inlet and outlet side
4) Inlet side, VGF...: One connection on each side

Ordering

When ordering, please give the complete type reference.

Actuators must be ordered as separate items.
Valve and actuator are supplied unassembled.

Example:
V...
Flanged valve VGF10.654P DN65

Manual adjuster **AGA61**

Adapter for SQX... actuators **AGA60**

Consisting of 2 stem parts and a connecting flange

Set of gaskets **AGA66**

- In connection with SKPx5… / SKL25… actuators
- Increases degree of protection from IP 54 to IP 65
- Refer to Mounting Instructions M7636.1

Only VGG10.154…, VGG10.204…, VGG10.254…, VGG10.404…:
When used in connection with AGA66, the maximum flow rates are reduced by about 25 %.

Only VGH...

Strainer for valve

With circlip and 1 mm mesh size.

Type reference of valve	Type reference of strainer
VGH10.18050 / DN80	AGA80
VGH10.19050 / DN100	AGA90
VGH10.19150 / DN125	AGA91

The strainers can be fitted in the flange sections of the valves, either on the gas inlet or gas outlet side.

Technical data

General valve data	Valve class in connection with actuator	A conforming to EN 161 (except with SQX... / SKL...)
	Group	2 (EN 161)
	Perm. medium temperature	0...60 °C
	Weight	refer to «Dimensions»
	Connecting flanges (VGF..., VGH...)	PN16 to ISO 7005-2
	Required flow rate	refer to «Flow chart»
	Perm. mounting position	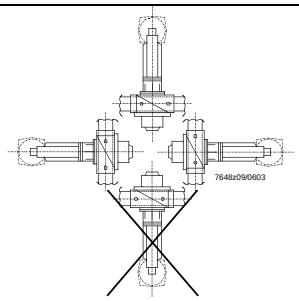 (refer to «Mounting notes»)
	Operating pressure	refer to «Type summary»
	Types of gases	refer to «Use»
	Trainer (only for use with VGG... / VGF...)	built-in, mesh size 0.9 mm

Environmental conditions	**Storage**	DIN EN 60 721-3-1
	Climatic conditions	class 1K3
	Mechanical conditions	class 1M2
	Temperature range	-20...+60 °C
	Humidity	< 95 % r.h.
	Transport	DIN EN 60 721-3-2
	Climatic conditions	class 2K3
	Mechanical conditions	class 2M2
	Temperature range	-20...+60 °C
	Humidity	< 95 % r.h.
	Operation	DIN EN 60 721-3-3
	Climatic conditions	class 3K3
	Mechanical conditions	class 3M3
	Temperature range	-10...+60 °C
	Humidity	< 95 % r.h.

Condensation, formation of ice and ingress of water are not permitted!

VGG... / VGF...

Functioning principle

Sectional view of VGG…valve

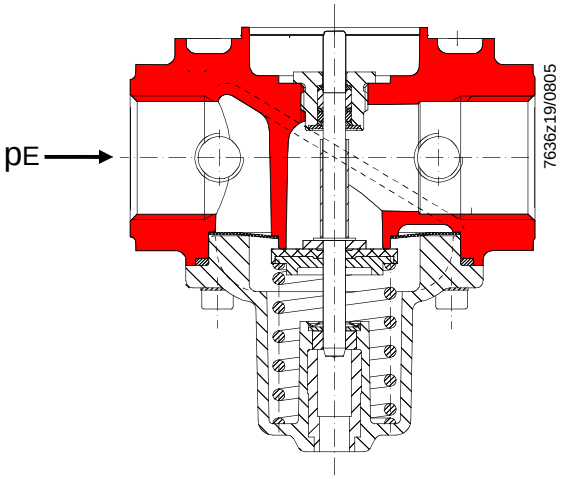

Application example
VGG... complete with SKP2...

Sectional view
VGG... complete with SKP2...

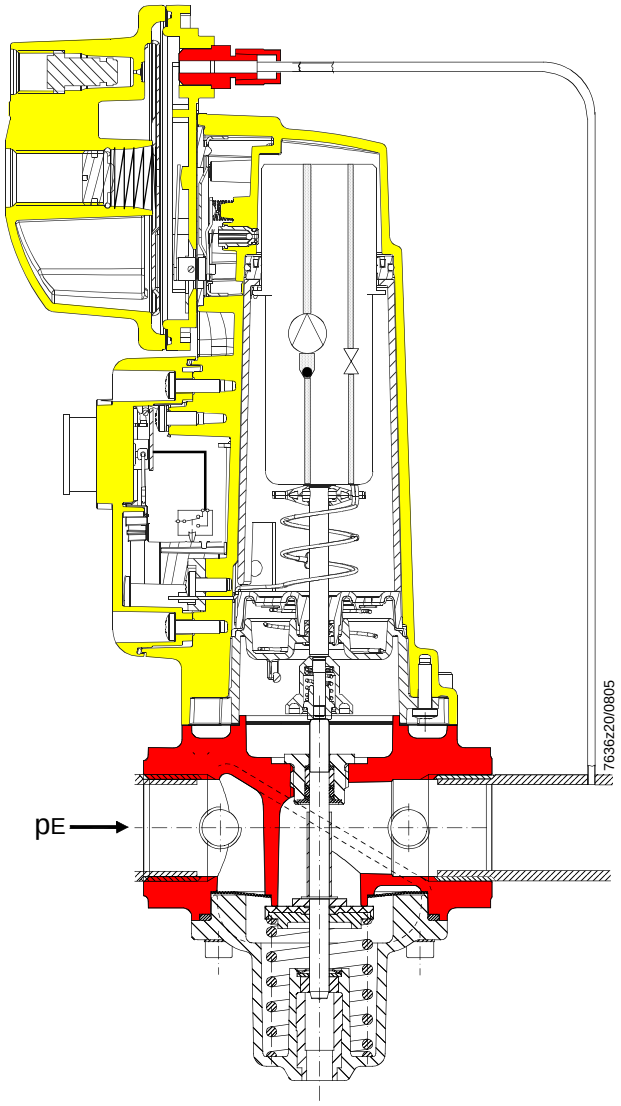

VGH...

Functioning principle

Sectional view of valve

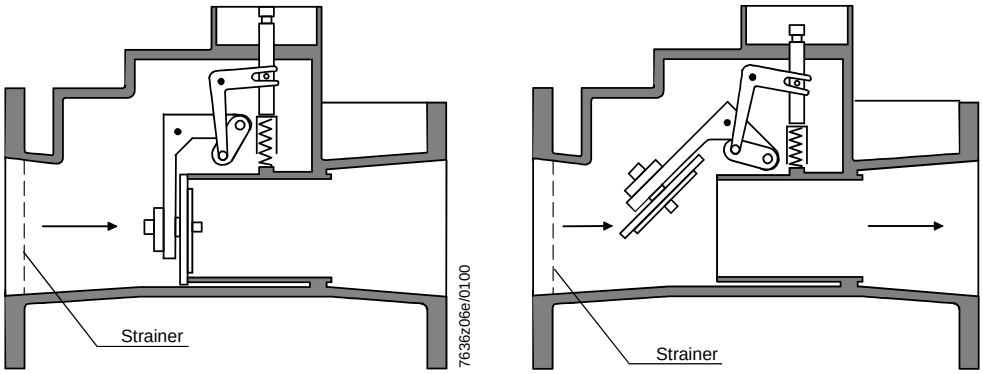

Fully closed

Fully open

Application example
VGH... complete with SKP2...

Sectional view
VGH... complete with SKP2...

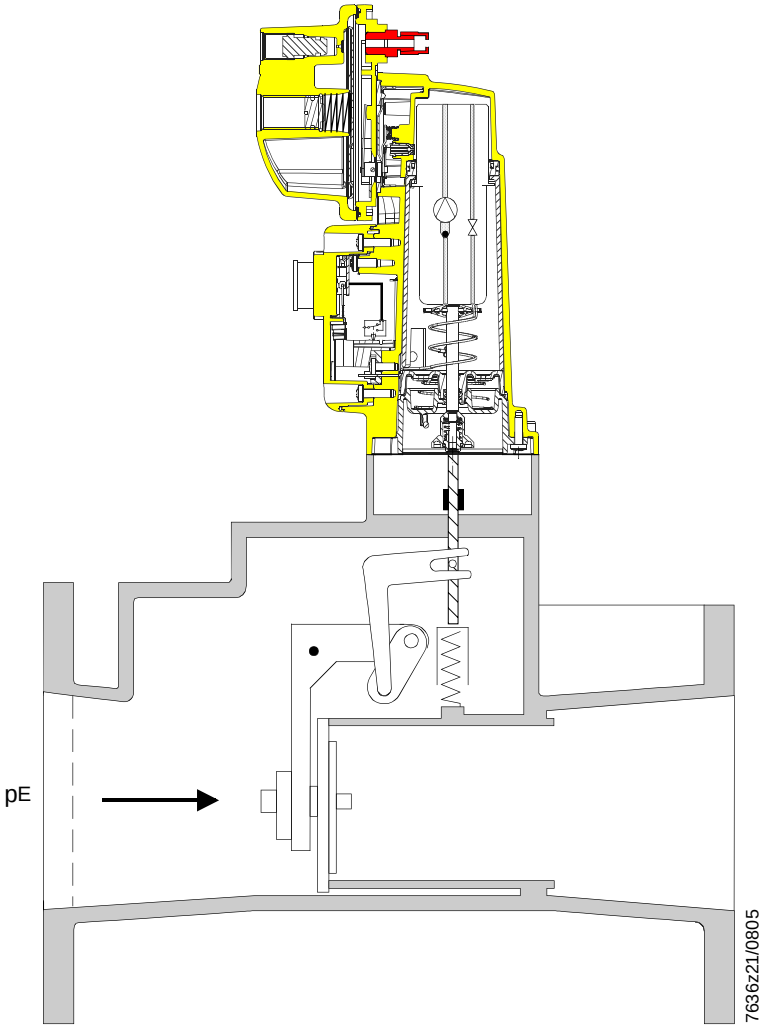

For fully open valves only

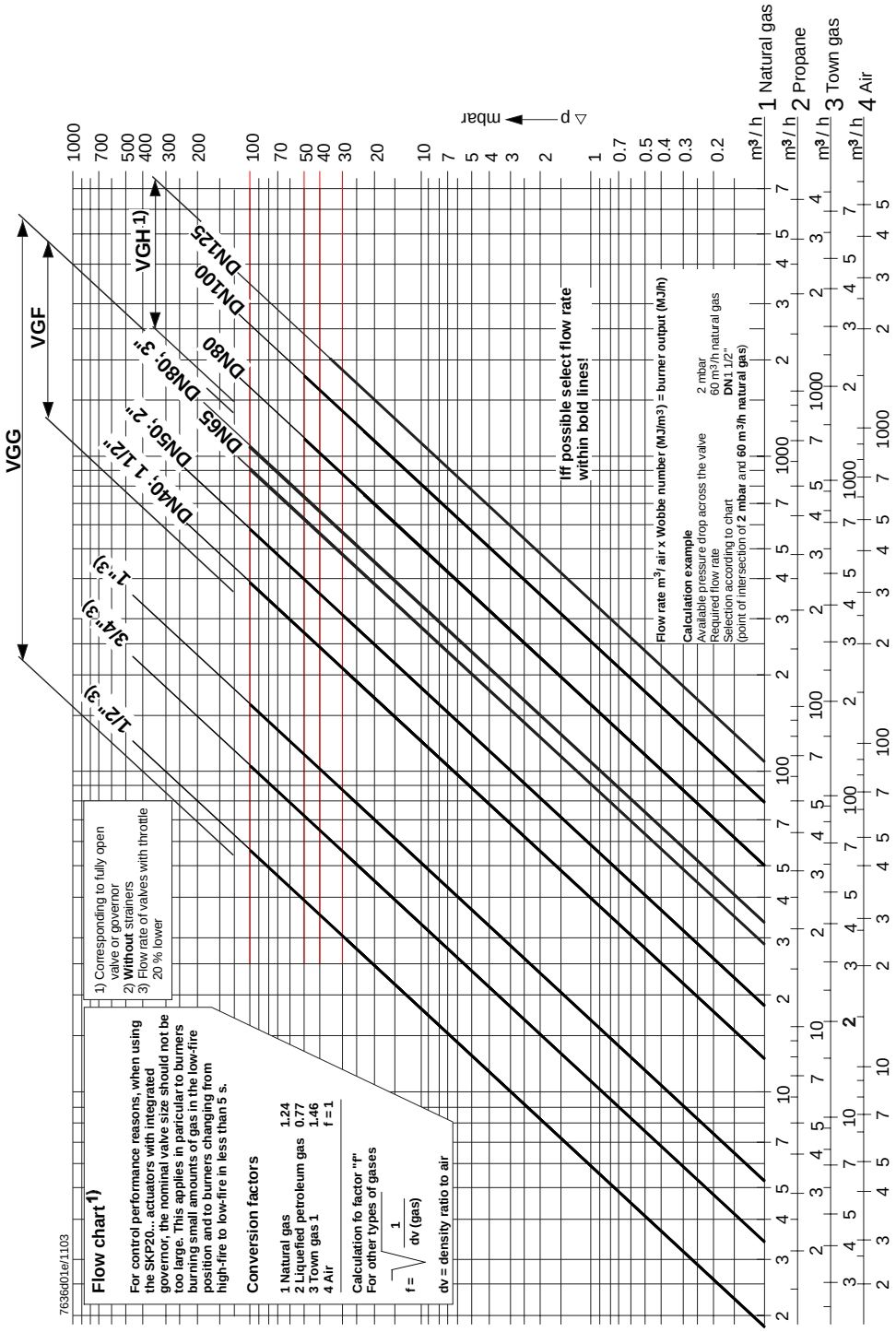

Legend

—— Maximum flow rate (valve fully open)

1) The valve curves shown represent valves with no trainer. Each strainer reduces the flow rate by about 8 %

The bold curves represent the recommended pressure drop ranges.
Valves with higher pressure drops can cause excessive flow noise.
Applications within the area of the bold characteristics (max. 70 m / s) are within acceptable flow noise levels.

Note:

- In the case of burners with low-fire flow rates, select a tightly sized valve (refer to the Data Sheet of the relevant actuator)
- If the available gas pressure exceeds the maximum permissible operating pressure, use an upstream pressure controller to lower it
- The pressure drop (curves of maximum flow) is based on a fully open valve

Conversion

Conversion of air flow rate to a corresponding gas flow rate (natural gas):

Basis for scale

Abscissa	Volumetric flow «QG» in m³/h	Density ratio «dv» to air	Conversion factor $f = \sqrt{\frac{1}{dv}}$
1	Air	1	1
2	Natural gas	0.61	1.28
3	Propane	1.562	0.8
4	Town gas	0.46	1.47

Conversion to air (m³ / h) from other types of gases:

$$QL = \frac{QG}{f}$$

where:

QL = air volume in m³ / h that produces the same pressure drop as «QG»

When used in connection with actuators having an integrated governor, the nominal valve size should not be selected too large to ensure good control performance.

Dimensions

Dimensions in mm

VGH... / DN80...125

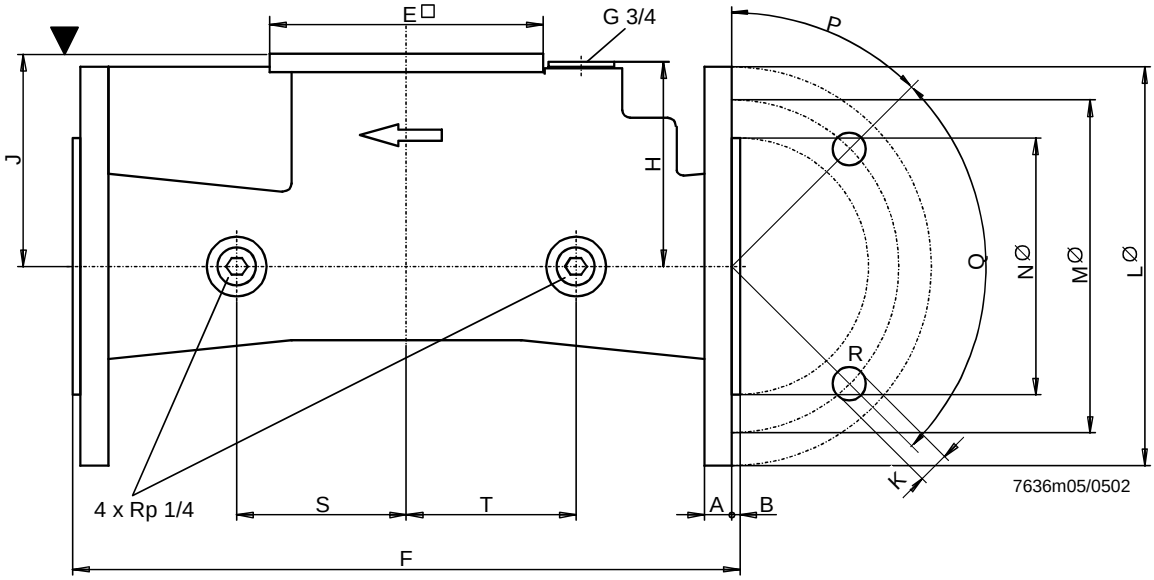

VGF... / DN 40...50

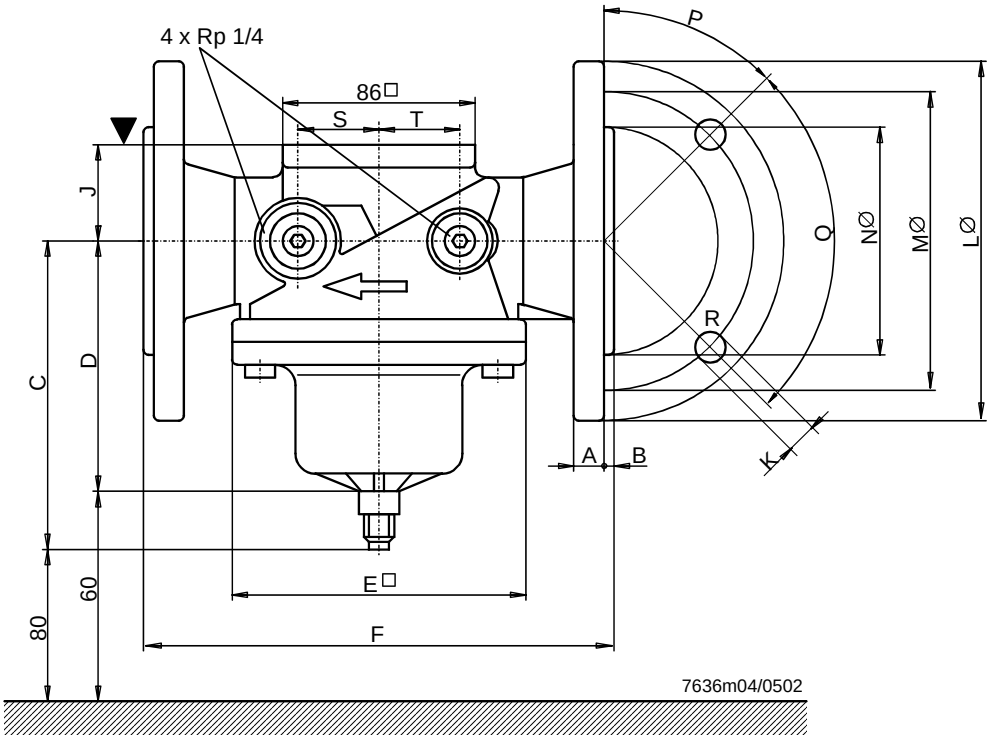

Dimensions in mm

VGF... / DN 65...80

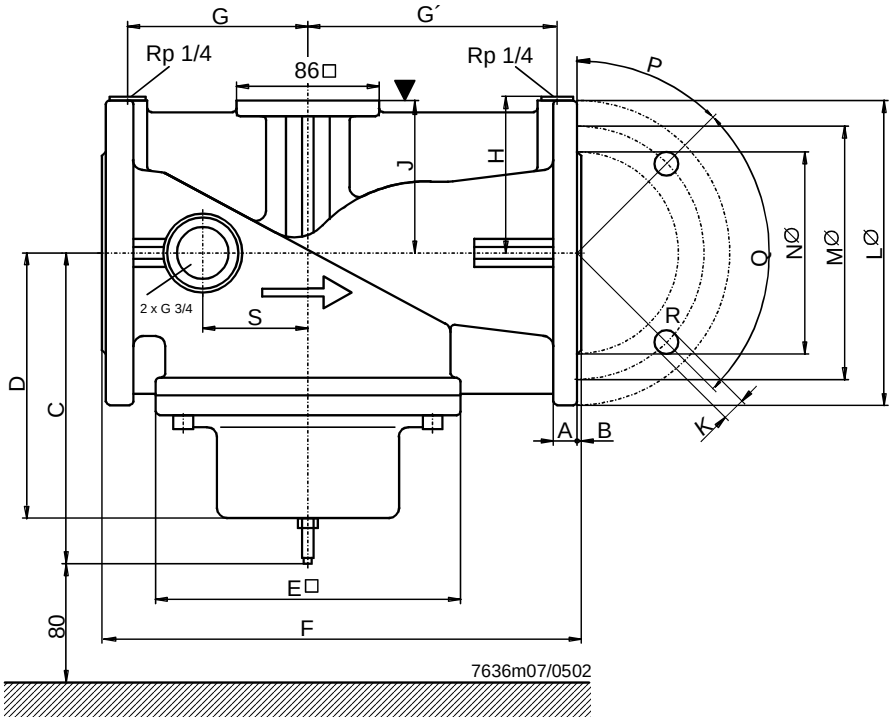

VGG… / 3“

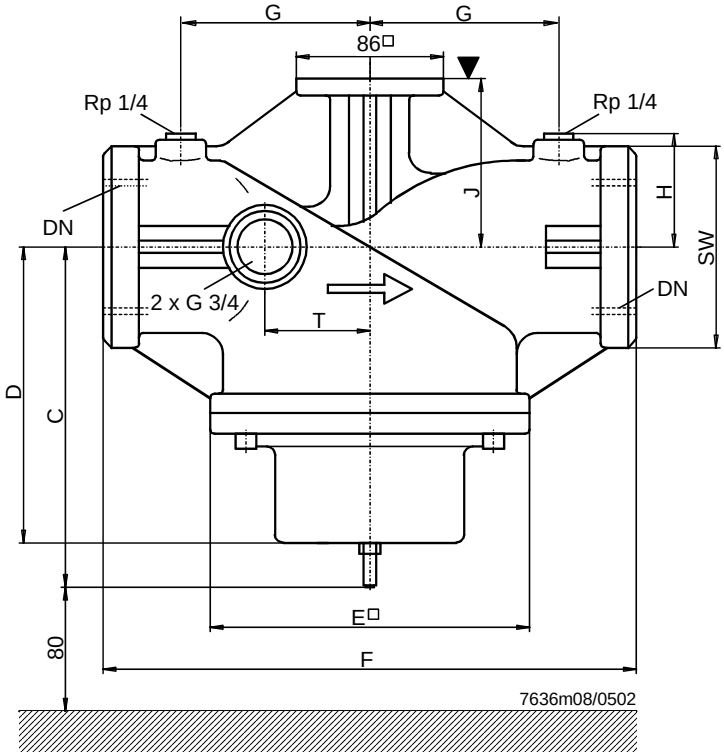

Dimensions in mm

VGG ½“...2“

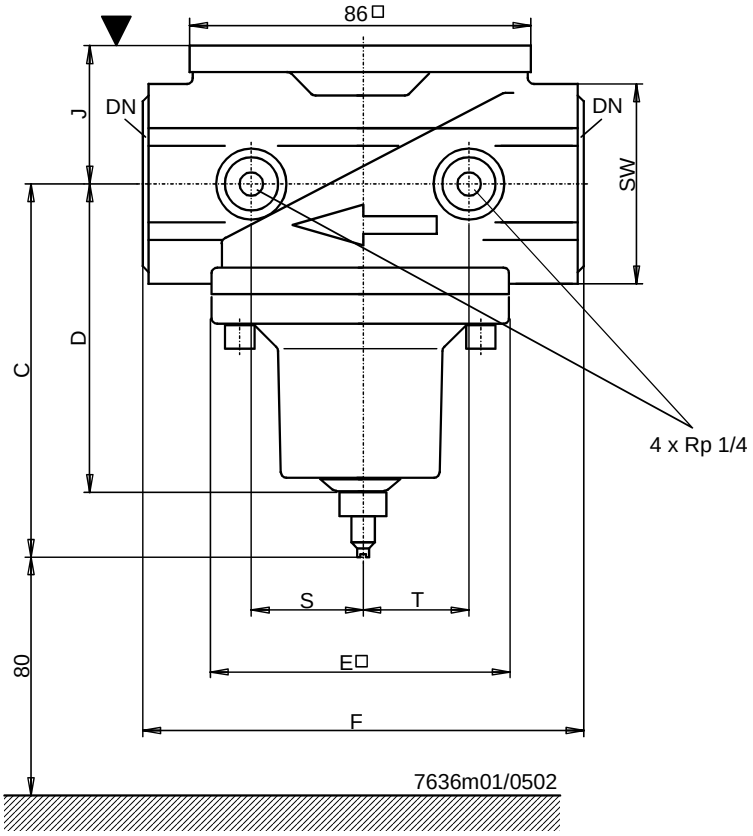

▼ Mounting surface for actuator or AGA60 adapter flange for SQX... actuator

Table of dimensions

Type reference	DN 1)	A	B	C	D	E□	F	G	G´	H	J	K	L∅	M∅	N∅	P	Q	R	S	T	SW*	kg
VGG10.15...	1/2"	---	---	96	79	80	109	---	---	---	32	---	---	---	---	---	---	---	28	31	46	0.8
VGG10.20...	3/4"	---	---	96	79	80	109	---	---	---	32	---	---	---	---	---	---	---	28	31	46	0.8
VGG10.25...	1"	---	---	96	79	80	109	---	---	---	32	---	---	---	---	---	---	---	28	31	46	0.75
VGG10.40...	1 1/2"	---	---	126	102	126	150	---	---	---	41	---	---	---	---	---	---	---	34	34	60	1.4
VGG10.50...	2"	---	---	130	107	126	170	---	---	---	50	---	---	---	---	---	---	---	34	34	75	1.95
VGG10.80...	3"	---	---	191	163	185	310	110	110	68	100	---	---	---	---	---	---	---	---	62	120	13.4
VGF10.40...	DN40	13	3	126	102	126	200	---	---	---	41	19	150	110	88	45°	90°	4	36	36	---	6
VGF10.50...	DN50	13	3	130	107	126	230	---	---	---	50	19	165	125	102	45°	90°	4	42	42	---	7.5
VGF10.65...	DN65	16,5	3	191	163	185	290	108	108	95	92	19	185	145	120	45°	90°	4	---	---	---	15.3
VGF10.80...	DN80	19	3	191	163	185	310	118	118	102	100	19	200	160	131	22.5°	45°	8	---	---	---	17.9
VGH10.180...	DN80	15	3	---	---	160	310	102	102	105	159	19	200	160	131	22.5°	45°	8	95	95	---	16.3
VGH10.190...	DN100	16	3	---	---	160	350	102	102	105	166	19	220	180	157	22.5°	45°	8	95	95	---	18.6
VGH10.191...	DN125	3	3	---	---	160	400	102	102	121	174	19	250	210	187	22.5°	45°	8	95	95	---	23.4

DN Nominal size, dimension for connection of medium
1) Flange conforming to ISO 7005-2
R Number of boreholes; for standards for flanges and threads, refer to «Type summary valves»
* Width across flats